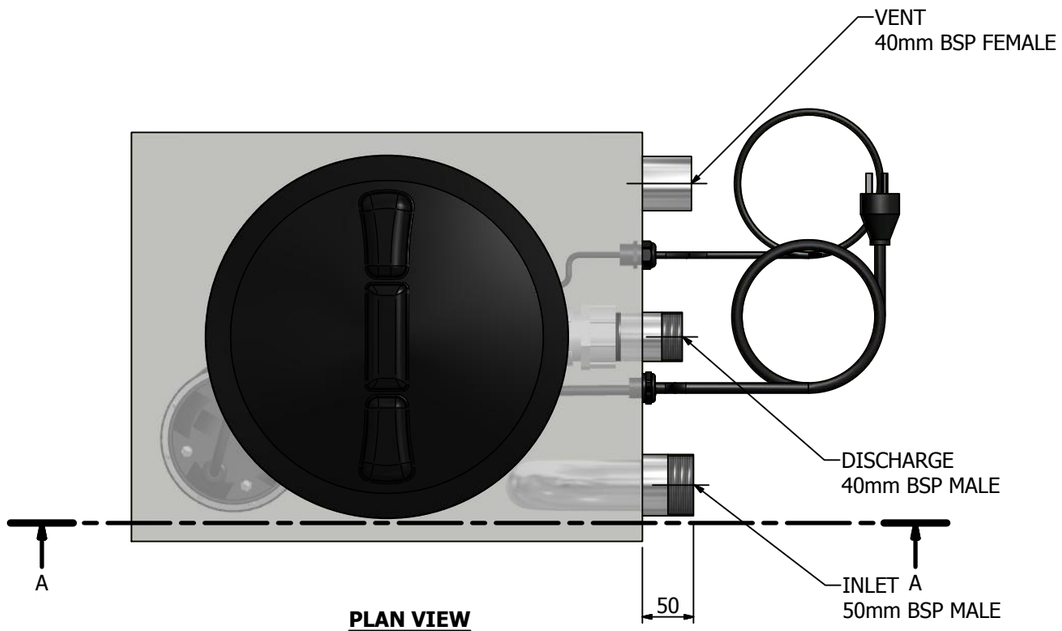

PLAN VIEW

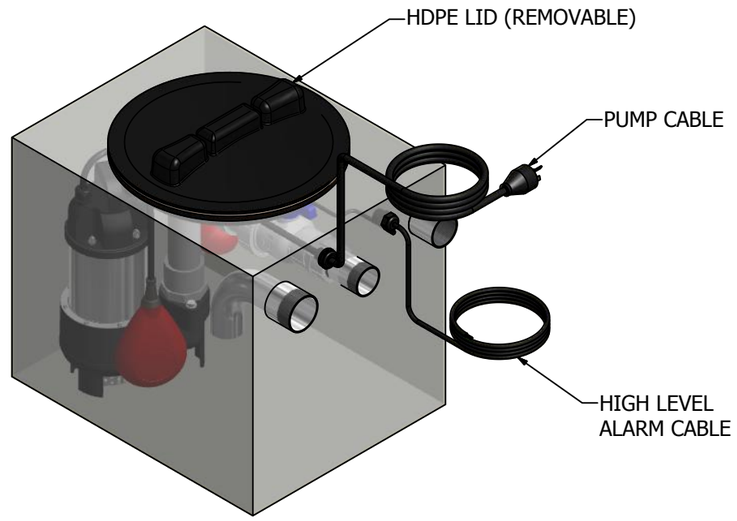

ISOMETRIC VIEW

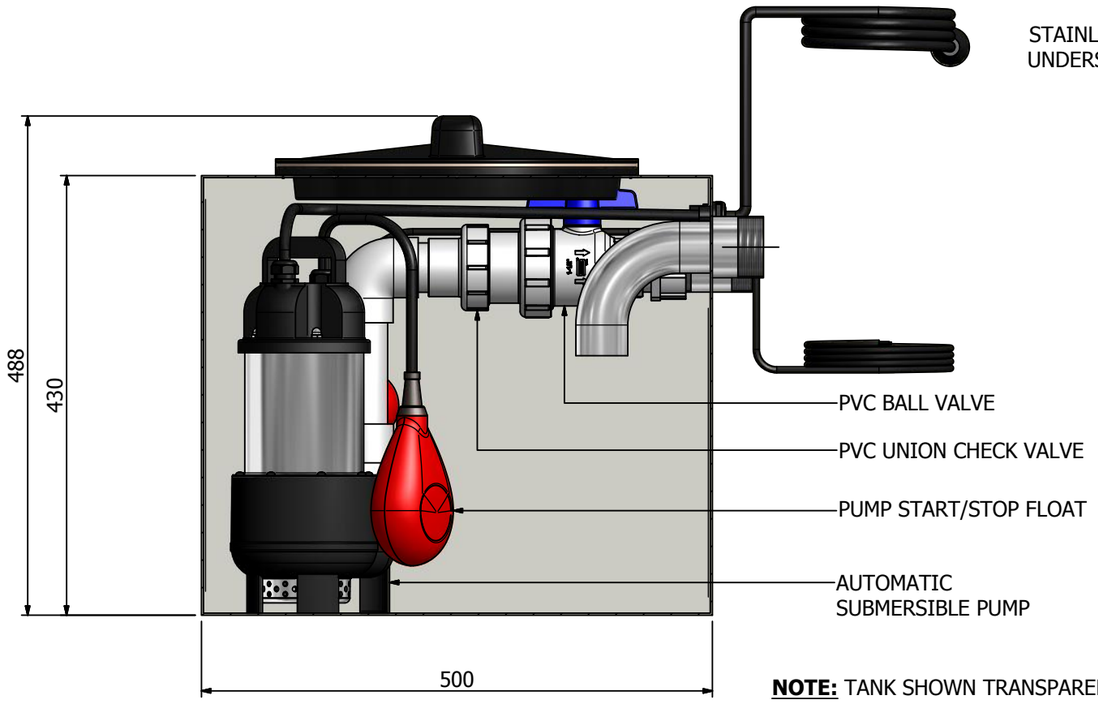

SECTION A-A

NOTE: TANK SHOWN TRANSPARENT FOR CLARITY

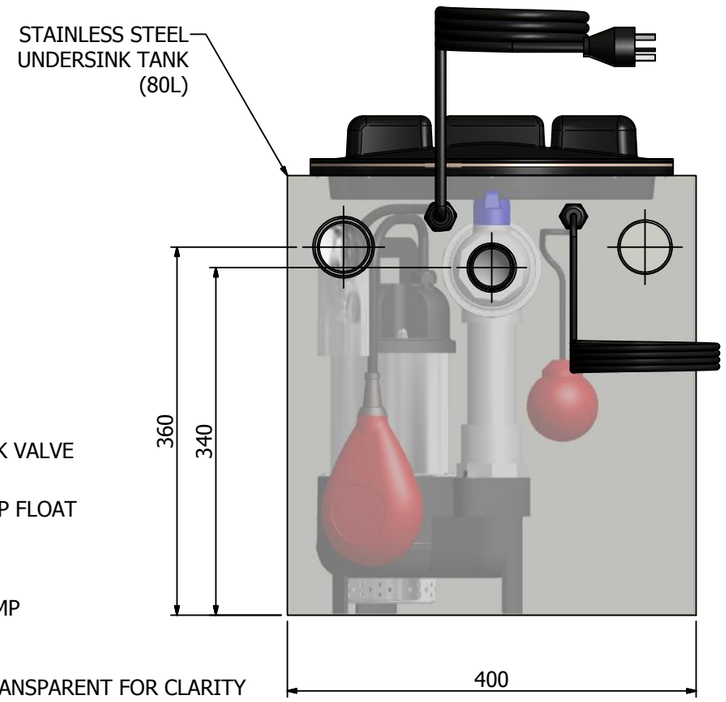

FRONT ELEVATION